cosin
scientific software

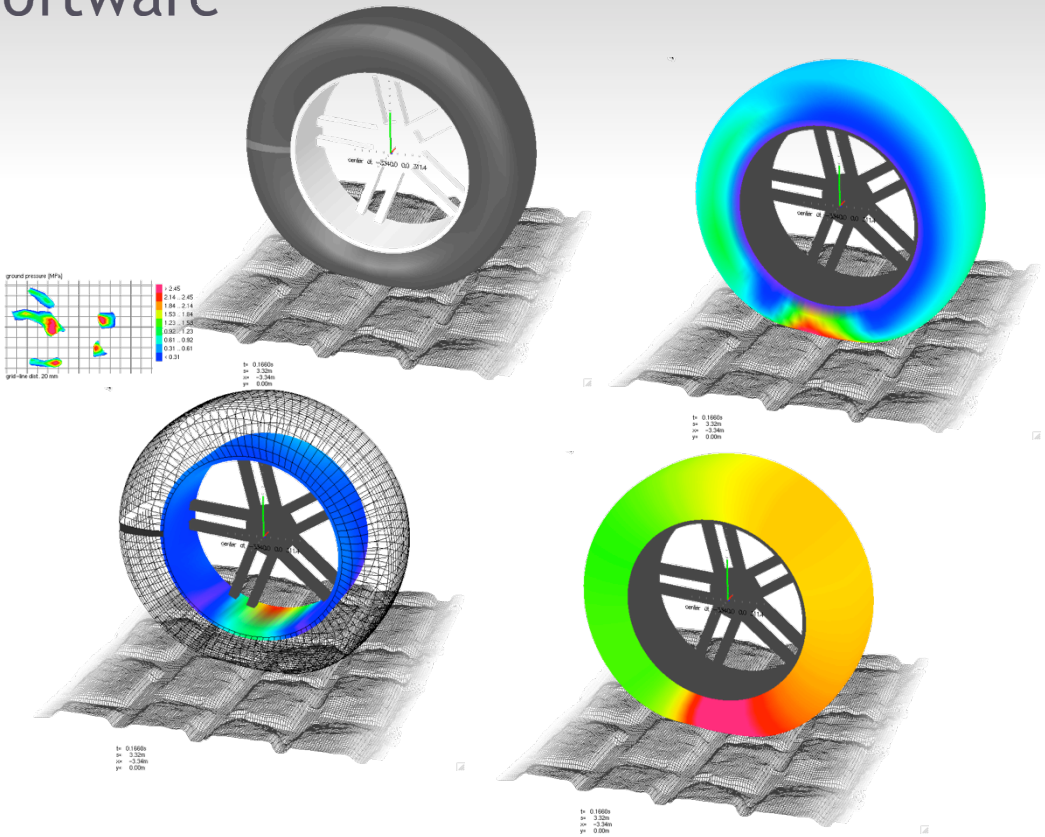

FTire: a Physically Based Tire Model for Handling, Ride, and Durability

Part 4: Model Extensions

Michael Gipser
Esslingen University of Applied Sciences
& cosin scientific software

- Flexible / Viscoplastic Rim
- Air Cavity Vibration
- Integrated Suspension MBS Models
- Multi-Threading / Real-Time / CTI Model Server

- ➔ **Flexible / Viscoplastic Rim**
- ➔ Air Cavity Vibration
- ➔ Integrated Suspension MBS Models
- ➔ Multi-Threading / Real-Time / CTI Model Server

distributed spatial
forces on rim flanges
(output from *FTire* structural model)

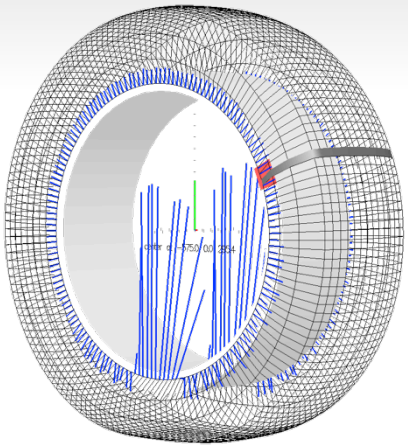

internal elastic / plastic
rim deformation model

user-specified external
rim deformation model

distributed spatial
rim flange displacements
(input to *FTire* structural model)

Internal Rim Model: Compliance

➜ radial and lateral compliance of rim flanges approximated by parameterized Green's function:

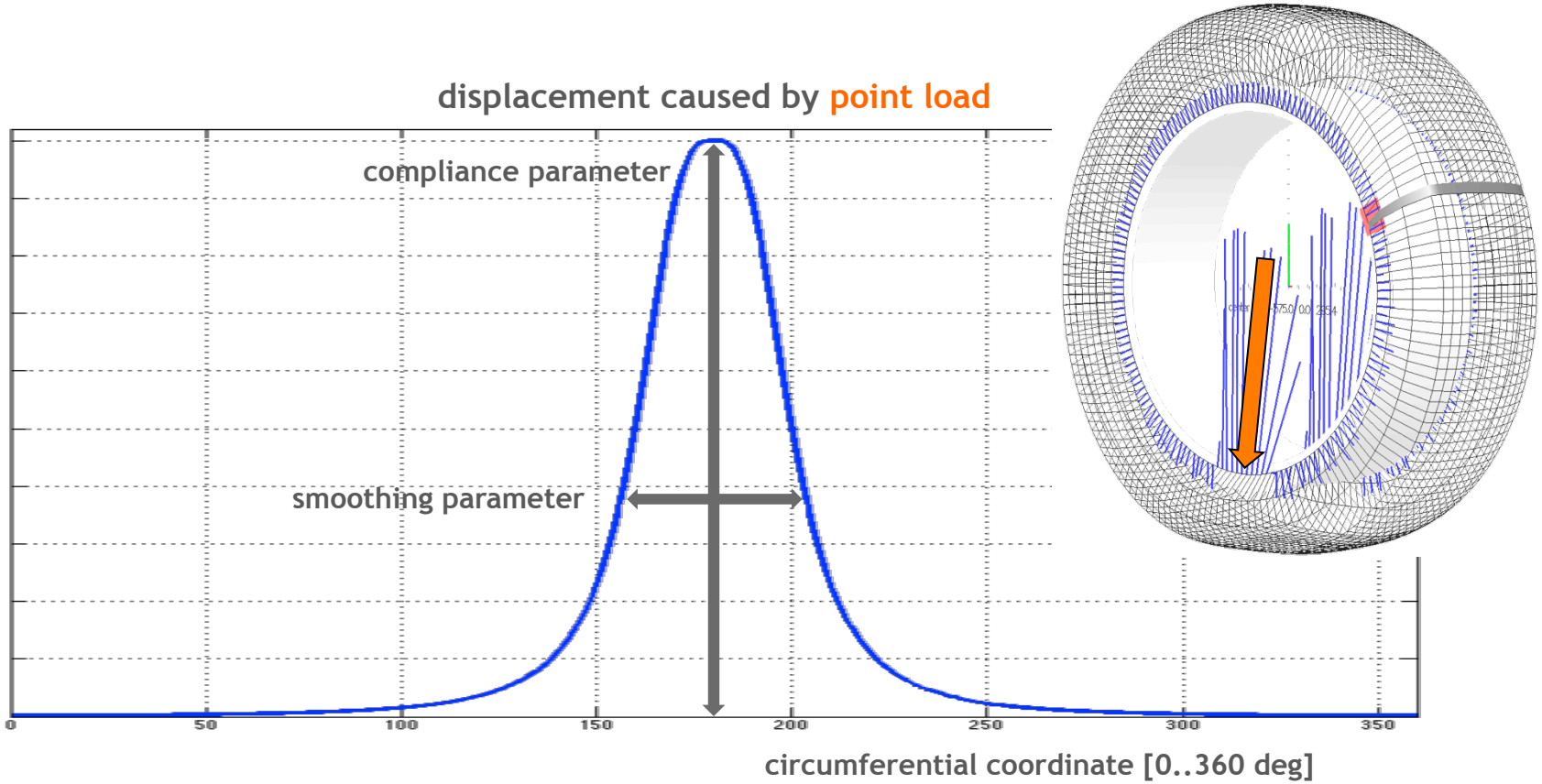

Internal Rim Model: Compliance Variation

➜ radial and lateral compliance modulated by spokes influence

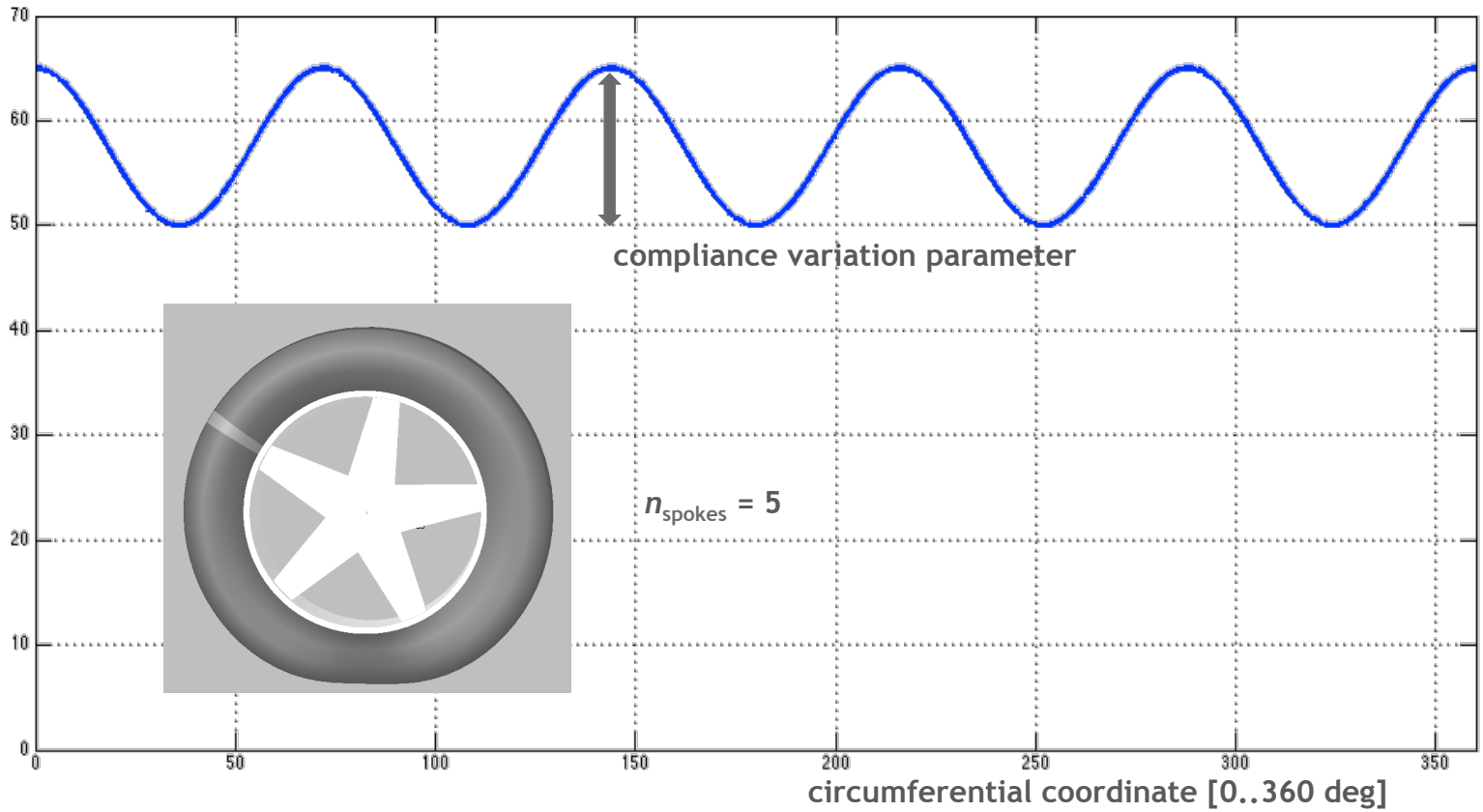

Internal Rim Model: Elastic Deformation

➜ cyclic deformation variation, caused by spokes

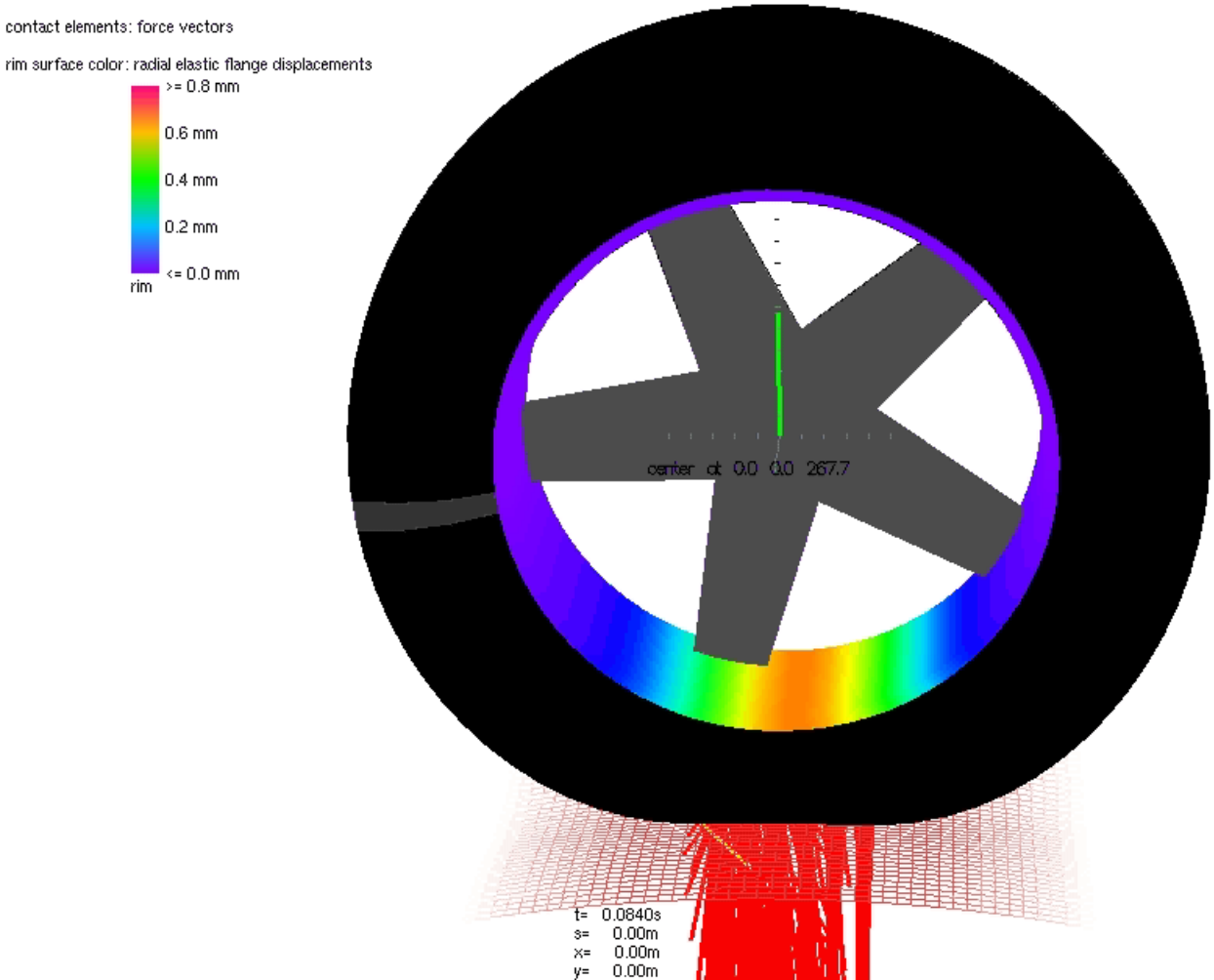

Internal Rim Model: Plastic (Permanent) Deformation

➜ permanent deformation, if elastic displacement locally exceeds threshold value

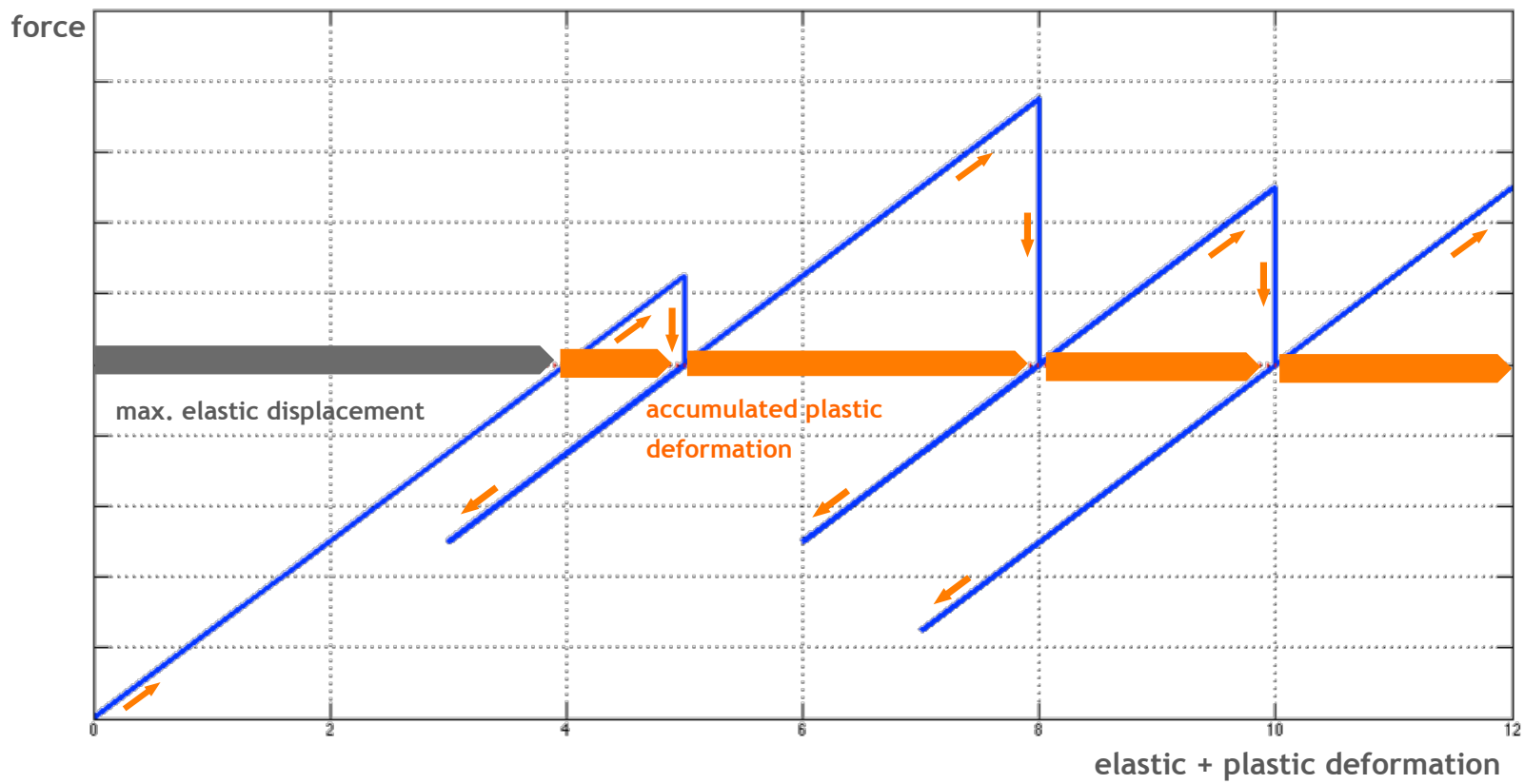

Internal Rim Model: Plastic (Permanent) Deformation

➜ **permanent** deformation, caused by extremely high cleats

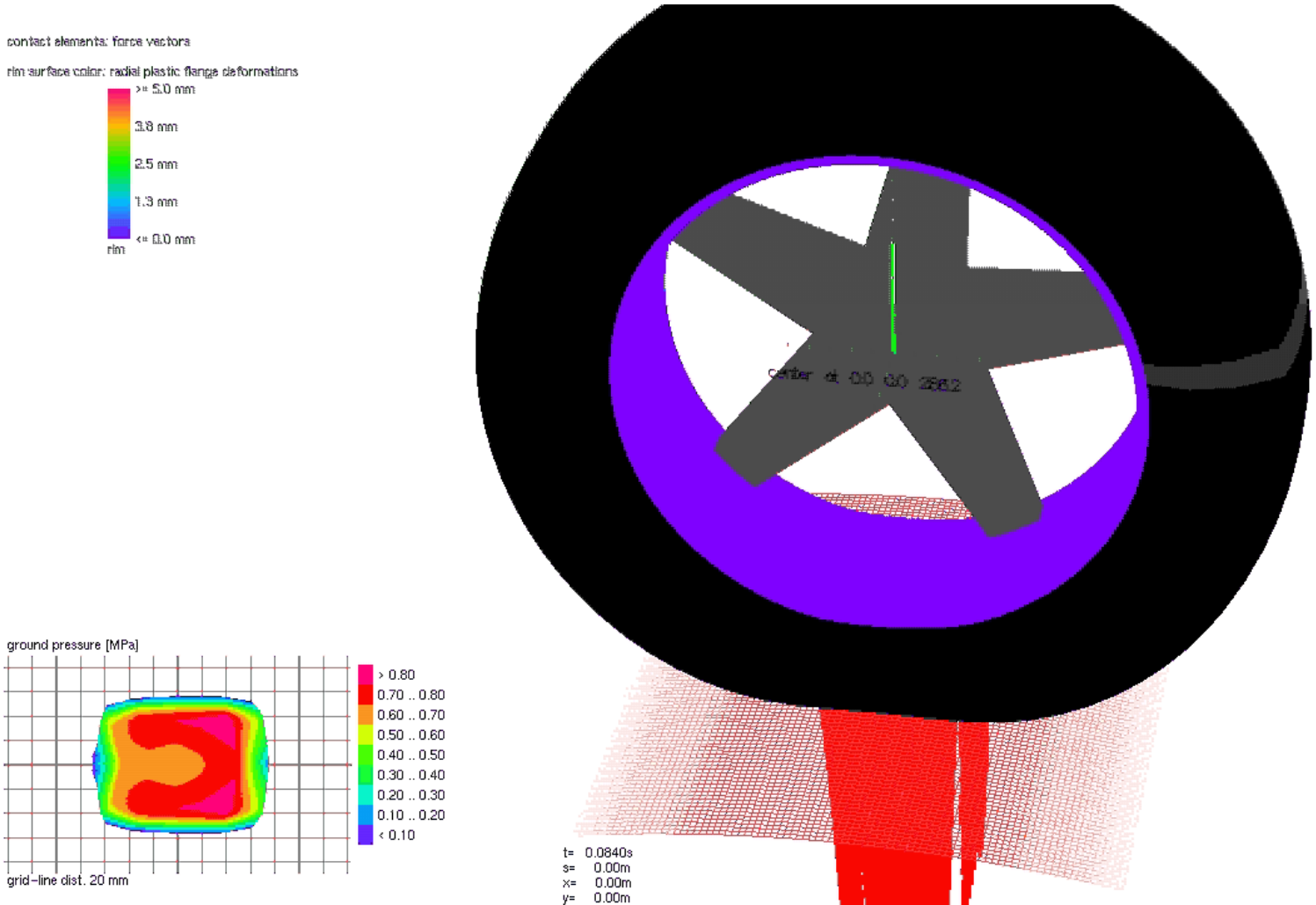

User-Specified External Rim Deformation Model

➜ simple CTI interface function to connect user-specified library

```
void urim (
 int ti, int nseg, double rrim, double wrim, double t,
 double fl[][3], double fr[][3],
 double del[][3], double der[][3], double dpl[][3], double dpr[][3],
 int*ier, char*file);

/* arguments:
   ti      tire handle (in)
   nseg    number of equally distributed nodes on one rim flange (in)
   rrim    rim bead radius [m] (in)
   wrim    axial rim flanges distance [m] (in)
   t       simulation time [s]. Terminate model if t>=1e60 (in)
   fl      force array on left rim flange nodes, in cylinder coordinates [N] (in)
   fr      force array on right rim flange nodes, in cylinder coordinates [N] (in)

   del     elastic displacements of left rim flange nodes, in cylinder coordinates [m] (out)
   der     elastic displacements of right rim flange nodes, in cylinder coordinates [m] (out)
   dpl     plastic deformation of left rim flange nodes, in cylinder coordinates [m] (in/out)
   dpr     plastic deformation of right rim flange nodes, in cylinder coordinates [m] (in/out)

   ret     return code, 0=ok (out)
   file    data file name (in)
*/
```

- Flexible / Viscoplastic Rim
- **Air Cavity Vibration**
- Integrated Suspension MBS Models
- Multi-Threading / Real-Time / CTI Model Server

Air Cavity Vibration Model:

- compressible viscous
- transient
- 1D flow (velocity $u = u(x,t)$ along circumferential coordinate x)
- with cross section area $A = A(t,x)$
- and periodic boundary conditions

$$\frac{\partial}{\partial t}\left(A\rho\right)+\frac{\partial}{\partial x}\left(A\rho u\right)=0$$

mass conservation

$$\frac{\partial}{\partial t}\left(A\rho u\right)+\frac{\partial}{\partial x}\left(A\rho u^2\right)=-A\left(\frac{\partial p}{\partial x}+\frac{\lambda}{2d}\rho u\left|u\right|\right)$$

impulse conservation

$$\frac{p}{p_0}=\left(\frac{\rho}{\rho_0}\right)^{\kappa}$$

Thermodynamics

Air Cavity Vibration Model: Numerical Solution

- 2 additional state variables per belt segment:

  flow velocity *u* and pressure *p*

- accurate computation of time and position-dependent belt segment cross section, depending on *FTire*'s actual structure distortion

- forces resulting from pressure variation applied to rim

- no additional data

- additional computational load typically about 10 %

Air Cavity Vibration Model: Resonance caused by Vertical Excitation

➜ swept harmonic excitation 50 ➔ 300 Hz; internal pressure variation

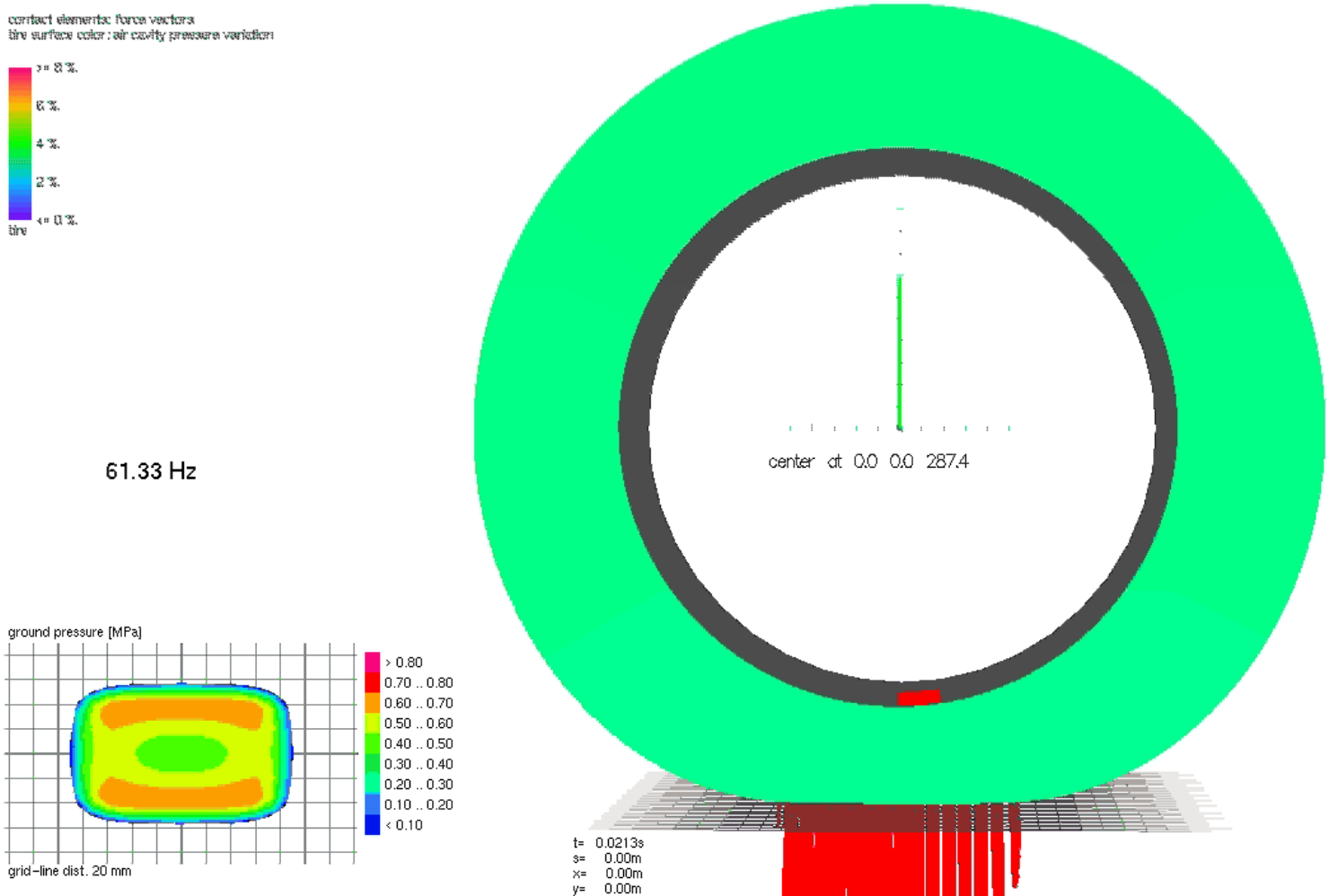

Air Cavity Vibration Model: Resonance caused by Road Waves

➜ road wave length 20 ➔ 8 cm; v = 80 km/h; internal air flow

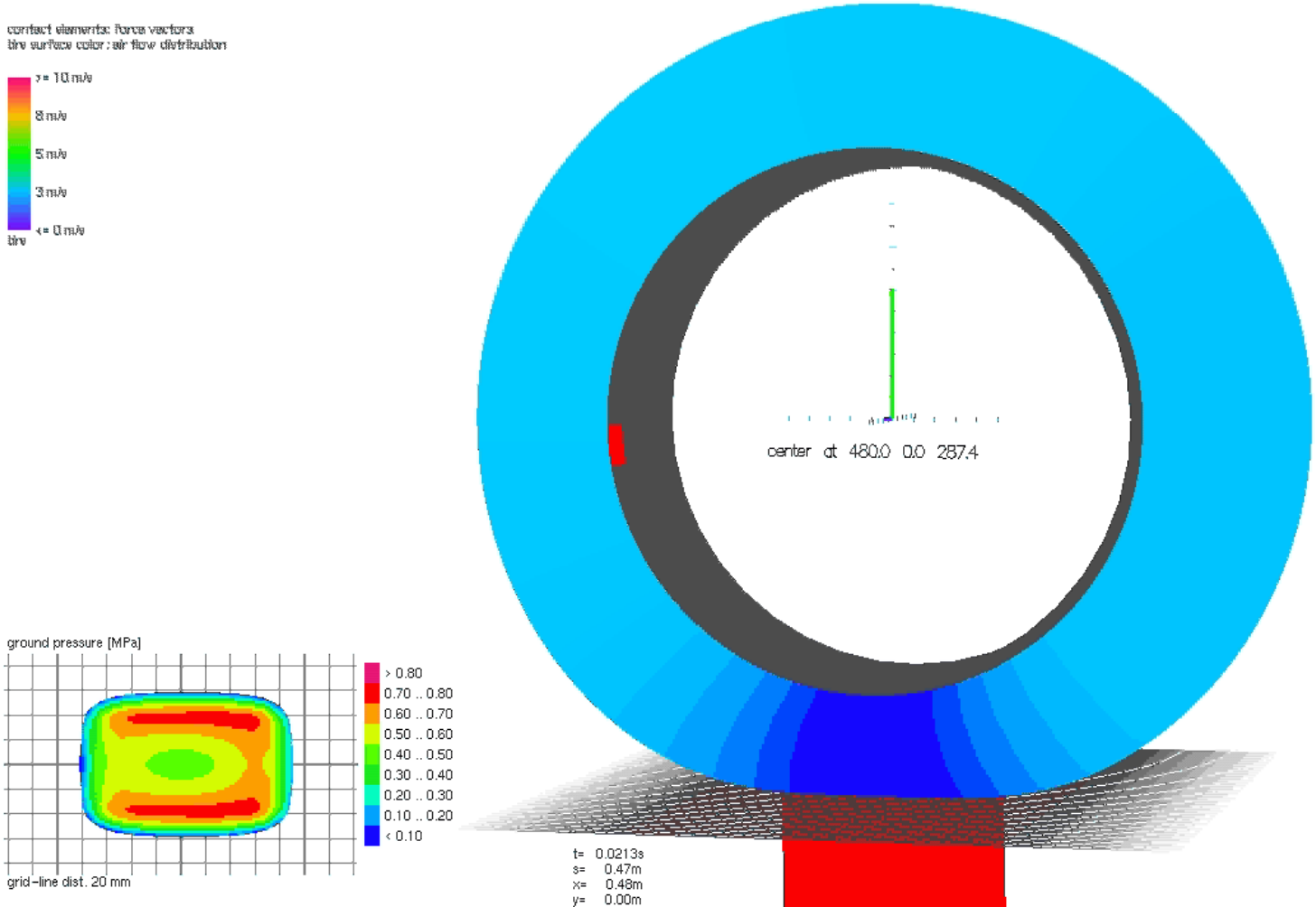

- Flexible / Viscoplastic Rim
- Air Cavity Vibration
- **Integrated Suspension MBS Models**
- Multi-Threading / Real-Time / CTI Model Server

Integrated Suspension Models

- optional detailed MBS suspension models
  combined with *FTire*; called via CTI (cosin Tire Interface)

- based one cosin/mbs (fully MBS-based driving simulator software)

- encapsulated 'vehicle corner model':
  wheel suspension + tire + road

- can be integrated into 3rd-party MBS software like MotionSolve
  runs in cosimulation mode

spatial position and velocity
of car-body reference point

↓

cosin/mbs suspension model,
internally calling *FTire*

↓

spatial forces and moments, applied
in reference point: contribution of
'vehicle corner' to car-body motion

Integrated Suspension Models: Element Catalogue

- rigid / flexible bodies
- nonlinear bushings / spring-dampers / friction
- spherical / revolute / hook / translational / general joints + friction
- suspension-specific special elements:

  power steering, propulsion, brakes, ..

  ARB, Watt linkage, push-rod + rocker, ..
- optional element refinements:

  nonlinear hydraulic damper, ball joint friction, hydromount
- interfaces to embedded C code (ESP, EPS, 4WD, 4WS, EDL, ..)
- all K&C output signals

Integrated Suspension Models: *FTire* + Multi-Link + Belgian Block

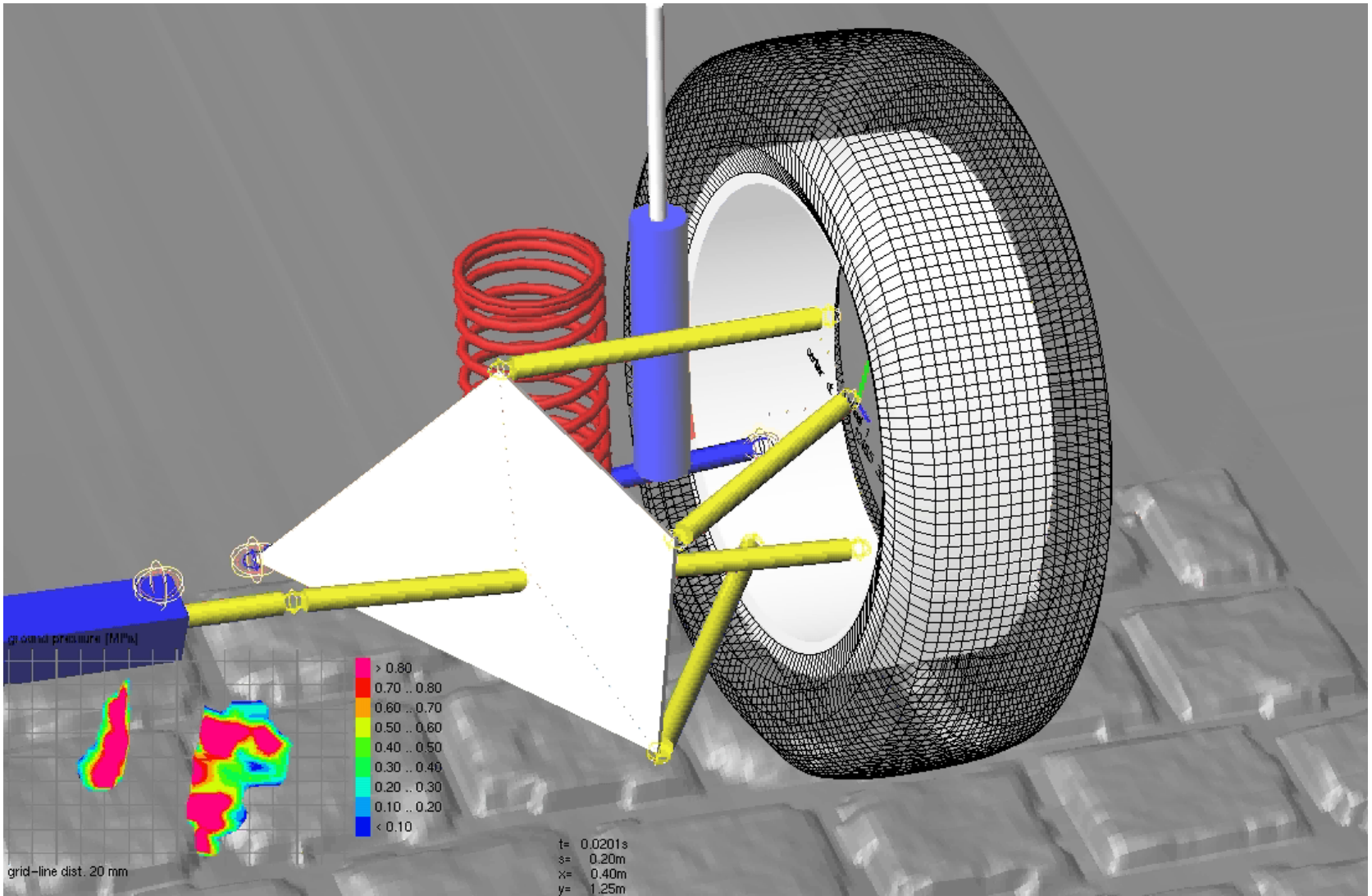

- Flexible / Viscoplastic Rim
- Air Cavity Vibration
- Integrated Suspension MBS Models
- **Multi-Threading / Real-Time / CTI Model Server**

FTire Multi-Threading and Real-Time

- ➜ *FTire* is thread-safe (can run in parallel)
- ➜ *FTire* can be easily down-scaled, to run multiple instances in real-time:
  - ✓ suppress extra output
  - ✓ deactivate model extensions
  - ✓ reduce number of segments, contact points
  - ✓ increase time step

FTire Multi-Threading and Real-Time: Selection in *FTire*/editor

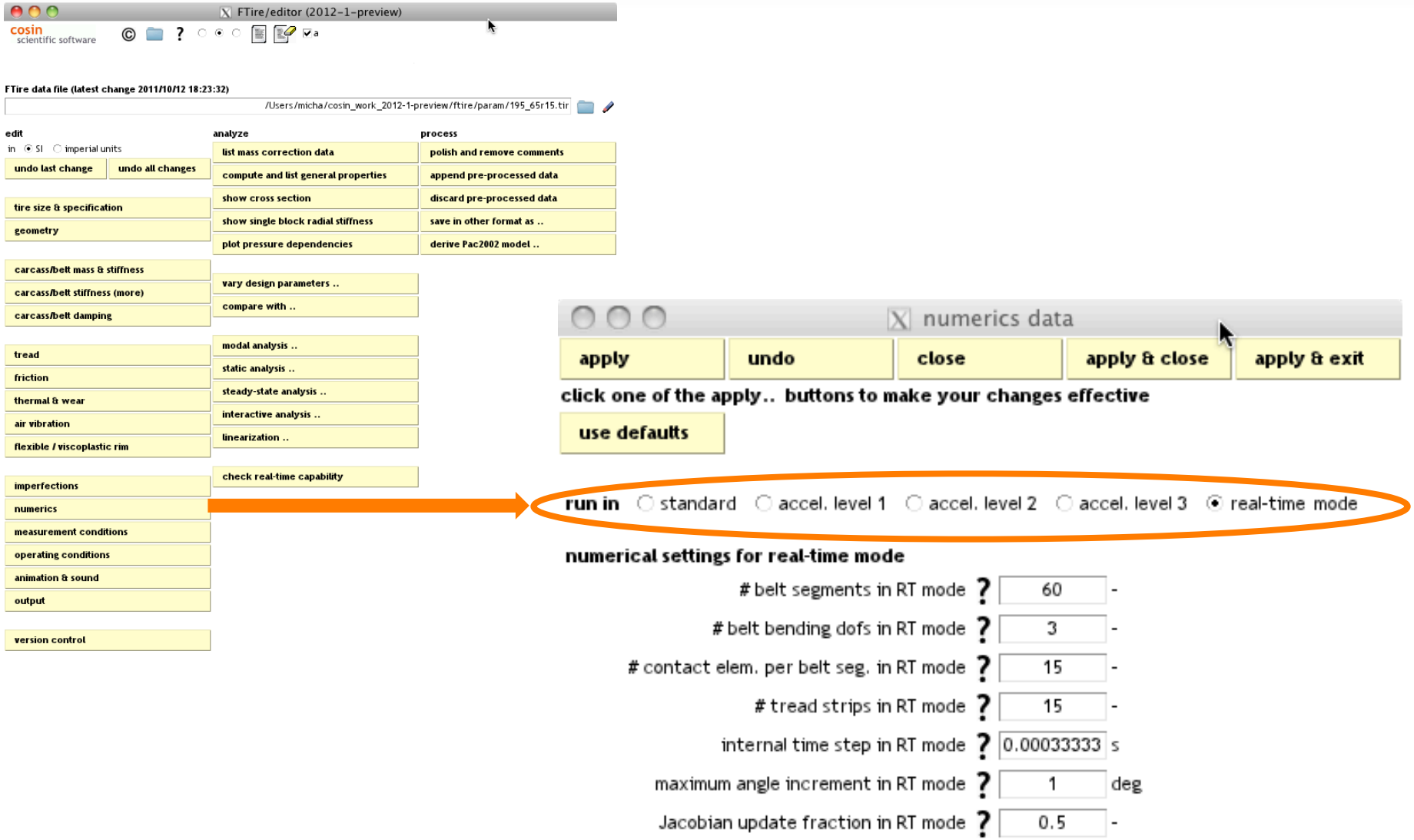

CTI Model Server: Use *FTire* in HiL Simulators

- CTI provides client/server technique, to run *FTire* in real-time on remote computer
- data exchange rim states ⇔ rim forces/moments via UDP
- on application side, remote computing is activated simply by specifying the CTI server's host name and port
- no additional model or software changes
- convenient operation of the remote CTI server, including data-base management for tire and road data files

..thank you for your attention!

Q & A

FTire etc.
demo versions,
papers,
animations,
documentation,
version updates,
and more:

www.cosin.eu